Product datasheet

Specifications

Green Premium™

Complete emergency switching off push button, Easy Harmony XA2, plastic, red mushroom 30mm, 22mm, turn to release, 1NC

XA2ES442

Main

Range Of Product	Easy Harmony XA2
Product Or Component Type	Complete emergency switching off push-button
Device Short Name	XA2
Bezel Material	Plastic
Mounting Diameter	22.5 mm

Complementary

Operating Position	Any position
Device Mounting	Fixing hole - diameter: 22 mm
Fixing Center	>= 30 x 40 mm (panel) - thickness: 1…5 mm
Shape Of Signaling Unit Head	Round
Type Of Operator	turn to release
Reset	Turn to release
Operator Profile	Red mushroom Ø 30 mm
Cap/Operator Or Lens Colour	Red
Contacts Type And Composition	1 NC
Contact Operation	Slow-break
Positive Opening	With NC contact
Mechanical Durability	100000 cycles
Connections - Terminals	Screw clamp terminal, <= 2 x 1.5 mm² Screw clamp terminal, <= 1 x 2.5 mm² Screw clamp terminal, >= 1 x 0.5 mm² Faston terminals, connection size: 6.3 mm
Tightening Torque	0.8 N.m
Short-Circuit Protection	10 A gL fuse conforming to IEC 60269-1
[Ui] Rated Insulation Voltage	600 V conforming to IEC 60947-1
[Uimp] Rated Impulse Withstand Voltage	6 kV conforming to IEC 60947-1
[Ie] Rated Operational Current	3 A at 240 V, AC-15, A600 0.27 A at 250 V, DC-13, Q600
Electrical Durability	500000 cycles, AC-15, 3 A at 230 V, operating rate <60 cyc/mn, load factor: 0.5 conforming to IEC 60947-5-4 500000 cycles, DC-13, 0.2 A at 110 V, operating rate <60 cyc/mn, load factor: 0.5 conforming to IEC 60947-5-4
Electrical Reliability	Λ < 10exp(-8) at 24 V

Disclaimer: This documentation is not intended as a substitute for and is not to be used for determining suitability or reliability of these products for specific user applications

Height	30 mm
Width	42 mm
Depth	73.7 mm
Net Weight	0.056 kg
Type Of Operator	Mechanical latching

Environment

Protective Treatment	TC
Ambient Air Temperature For Storage	-40…70 °C
Ambient Air Temperature For Operation	-25…55 °C
Overvoltage Category	Class I conforming to IEC 536
Ip Degree Of Protection	IP65 conforming to IEC 60068-2-27
Ik Degree Of Protection	IK03
Standards	IEC 60947-5-1 GB 14048.5 IEC 60947-1 GB 14048.1 IEC 60529
Product Certifications	CCC CE
Vibration Resistance	10 gn (f= 40…500 Hz) conforming to IEC 60068-2-6
Shock Resistance	70 gn (duration = 11 ms) for half sine wave acceleration conforming to IEC 60068-2-27

Packing Units

Unit Type Of Package 1	PCE
Number Of Units In Package 1	1
Package 1 Height	2.0 cm
Package 1 Width	4.0 cm
Package 1 Length	7.5 cm
Package 1 Weight	53.0 g
Unit Type Of Package 2	S02
Number Of Units In Package 2	100
Package 2 Height	15.0 cm
Package 2 Width	30.0 cm
Package 2 Length	40.0 cm
Package 2 Weight	5.626 kg
Unit Type Of Package 3	P06
Number Of Units In Package 3	1600
Package 3 Height	75.0 cm
Package 3 Width	60.0 cm
Package 3 Length	80.0 cm
Package 3 Weight	98.016 kg

Sustainability

Green Premium™ label is Schneider Electric's commitment to delivering products with best-in-class environmental performance. Green Premium promises compliance with the latest regulations, transparency on environmental impacts, as well as circular and low-CO_2 products.

Guide to assessing product sustainability is a white paper that clarifies global eco-label standards and how to interpret environmental declarations.

Learn more about Green Premium >

Guide to assess a product's sustainability >

Transparency RoHS/REACh

Well-being performance

Reach Free Of Svhc	
Toxic Heavy Metal Free	
Mercury Free	
Rohs Exemption Information	Yes

Certifications & Standards

Reach Regulation	REACh Declaration
Eu Rohs Directive	Pro-active compliance (Product out of EU RoHS legal scope) EU RoHS Declaration
China Rohs Regulation	China RoHS declaration
Environmental Disclosure	Product Environmental Profile
Weee	The product must be disposed on European Union markets following specific waste collection and never end up in rubbish bins
Circularity Profile	End of Life Information

Dimensions Drawings

Dimensions

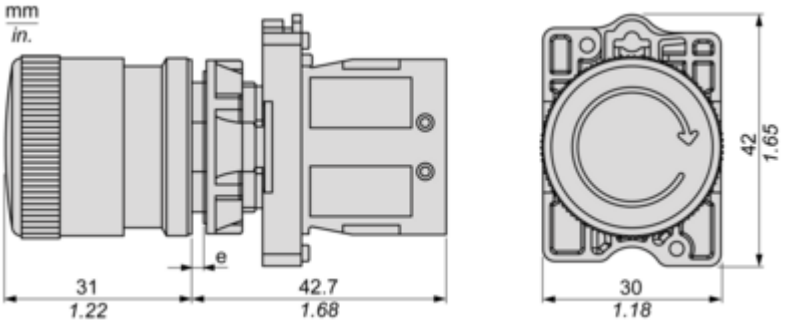

(e) Clamping thickness: 1 to 6 mm / 0.04 to 0.24 in.

Mounting and Clearance

Panel Cut-out for Pushbuttons, Switches and Pilot Lights (Finished Holes, Ready for Installation)

Connection by Screw Clamp Terminals

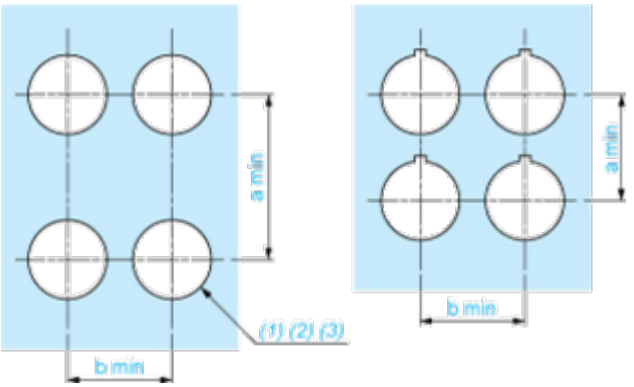

(1) Diameter on finished panel or support
(2) For selector switches and Emergency stop buttons, use of an anti-rotation plate type ZB5AZ902 is recommended.
(3) Ø22.5 mm recommended (Ø22.3 $_{0}^{+0.4}$) / Ø0.89 in. recommended (Ø0.88 in. $_{0}^{+0.016}$)

Connections	a in mm	a in in.	b in mm	b in in.
By screw clamp terminals connector	40	1.57	30	1.18
By Faston connectors	45	1.77	32	1.26

Detail of Lug Recess

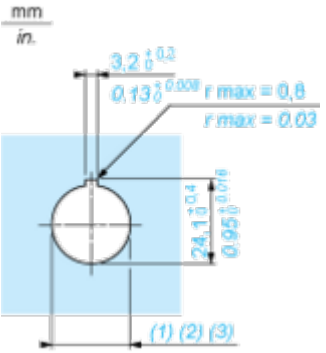

(1) Diameter on finished panel or support
(2) For selector switches and Emergency stop buttons, use of an anti-rotation plate type ZB5AZ902 is recommended.
(3) Ø22.5 mm recommended (Ø22.3 $_{0}^{+0.4}$) / Ø0.89 in. recommended (Ø0.88 in. $_{0}^{+0.016}$)