Product datasheet

Specifications

Green Premium™

Head for key selector switch, Harmony XB6, rectangular Ø 16 3 position spring return 200

ZB6DGS

Discontinued on: 1 Nov 2020

Discontinued

Main

Range Of Product	Harmony XB6
Product Or Component Type	Head for key selector switch
Device Short Name	ZB6
Bezel Material	Plastic
Mounting Diameter	16 mm
Sale Per Indivisible Quantity	1
Shape Of Signaling Unit Head	Rectangular
Type Of Operator	Right to centre spring return
Operator Profile	Black key switch
Operator Position Information	3 positions
Type Of Keylock	Key 200
Key Withdrawal Position	Left-hand and center

Complementary

Cad Overall Width	24 mm
Cad Overall Height	18 mm
Cad Overall Depth	55 mm

Environment

Protective Treatment	TC
Ambient Air Temperature For Storage	-40…70 °C
Ambient Air Temperature For Operation	-25…70 °C
Electrical Shock Protection Class	Class II conforming to IEC 61140
Ip Degree Of Protection	IP65 conforming to IEC 60529
Nema Degree Of Protection	NEMA 13 conforming to UL 50 NEMA 4 conforming to UL 50 NEMA 4X conforming to UL 50 NEMA 13 conforming to CSA C22.2 No 94 NEMA 4 conforming to CSA C22.2 No 94 NEMA 4X conforming to CSA C22.2 No 94

Disclaimer: This documentation is not intended as a substitute for and is not to be used for determining suitability or reliability of these products for specific user applications

Standards	JIS C8201-5-1 EN/IEC 60947-1 JIS C 852 EN/IEC 60947-5-1 CSA C22.2 No 14 EN/IEC 60947-5-5 UL 508 JIS C8201-1
Product Certifications	UL GOST CSA CCC
Vibration Resistance	+/- 3 mm (f= 2…500 Hz) conforming to IEC 60068-2-6 5 gn (f= 2…500 Hz) conforming to IEC 60068-2-6
Shock Resistance	30 gn (duration = 18 ms) for half sine wave acceleration conforming to IEC 60068-2-27 50 gn (duration = 11 ms) for half sine wave acceleration conforming to IEC 60068-2-27

Contractual warranty

Warranty	18 months

Sustainability

Green Premium™ label is Schneider Electric's commitment to delivering products with best-in-class environmental performance. Green Premium promises compliance with the latest regulations, transparency on environmental impacts, as well as circular and low-CO_2 products.

Guide to assessing product sustainability is a white paper that clarifies global eco-label standards and how to interpret environmental declarations.

Learn more about Green Premium >

Guide to assess a product's sustainability >

Transparency RoHS/REACh

Well-being performance

Reach Free Of Svhc	
Toxic Heavy Metal Free	
Mercury Free	
Rohs Exemption Information	Yes

Certifications & Standards

Reach Regulation	REACh Declaration
Eu Rohs Directive	Pro-active compliance (Product out of EU RoHS legal scope) EU RoHS Declaration
China Rohs Regulation	China RoHS declaration
Environmental Disclosure	Product Environmental Profile
Circularity Profile	End of Life Information

Dimensions Drawings

Rectangular Head for Key Switch

Dimensions

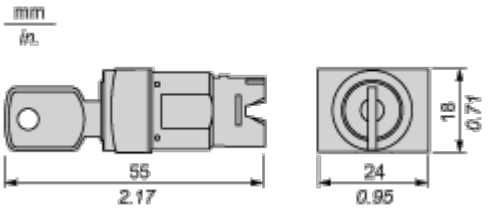

Mounting and Clearance

Panel Cut-out

For Rectangular Head

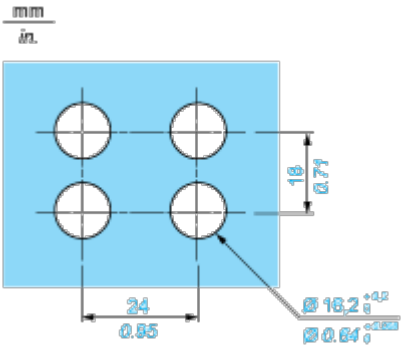

Pushbuttons, Switches and Pilot Lights for Printed Circuit Board Connection

Front Panel Cut-out (Viewed from Installer's Side)

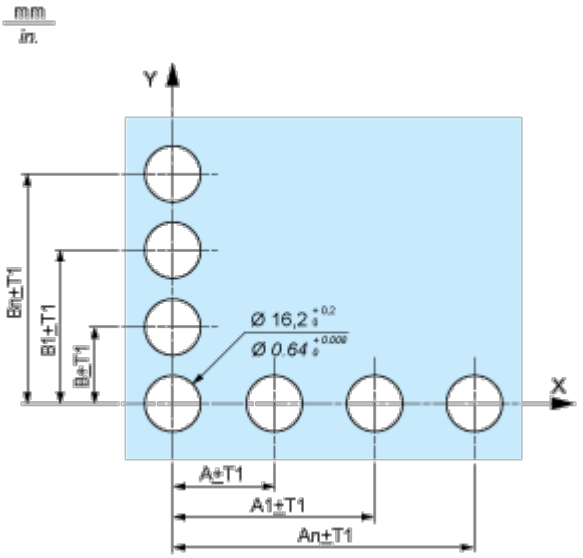

Printed Circuit Board Drillings (Viewed from Electrical Block Side)

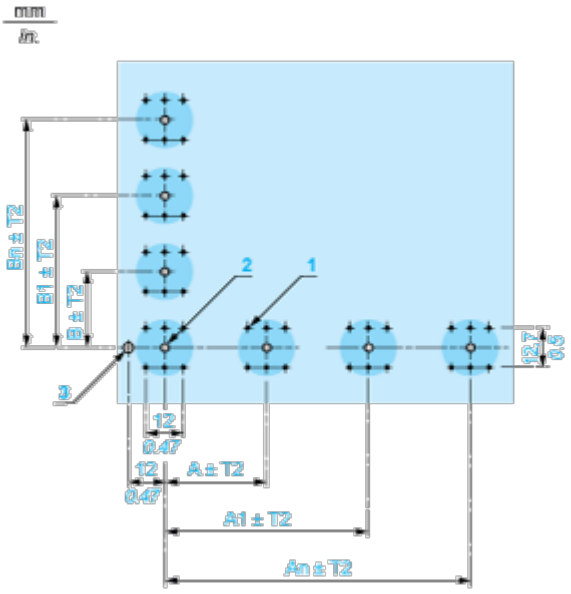

A 24 mm/0.94 in. minimum for rectangular heads, 18 mm/0.71 in. minimum for square or circular heads

B 18 mm/0.71 in. minimum

(1) 6 x Ø 1.1 mm / 6 x Ø 0.04 in. holes.

(2) 1 x Ø $2.6^{0}_{-0.2}$ mm / 1 x Ø $0.10^{0}_{-0.008}$ in. hole for locating pin, only when using socket adaptor ZB6Y010.

(3) 1 x Ø $3.2^{0}_{-0.2}$ mm / 1 x Ø $0.13^{0}_{-0.008}$ in. hole for fixing of printed circuit board onto the front panel using body bracket ZB6Y011. This hole must be drilled on the left-hand side, when heads are positioned at the normal angle. Fit a body bracket ZB6Y011 every 72 mm/2.83 in. maximum for cut-outs on 24 mm/0.94 in. centres (rectangular heads) and 54 mm/2.13 in. maximum for cut-outs on 18 mm/0.71 in. centres (square or circular heads).

General tolerances of the panel and printed circuit board: T1, T2: T1 + T2 = 0.3 mm/0.01 in. maximum.
Installation precautions:

Thickness of printed circuit board: 1.6 mm/0.06 in. minimum.

Mounting with Body Bracket

With socket adaptor ZB6Y010

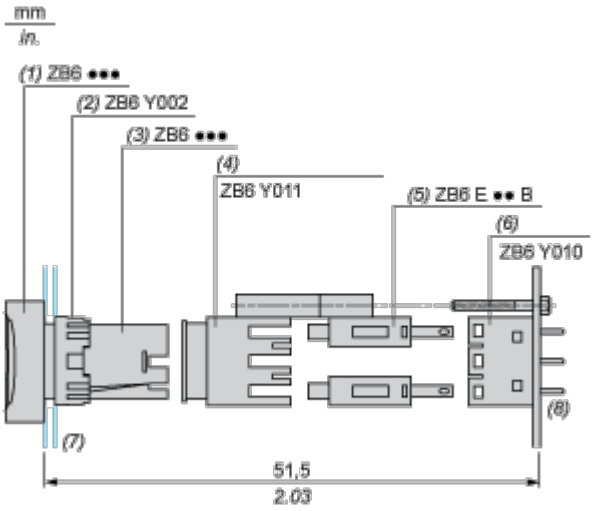

(1) Head

(2) Nut

(3) Body

(4) Body bracket

(5) Contact block

(6) Socket adaptor

(7) Panel

(8) Printed circuit

Direct mounting without socket adaptor ZB6Y010

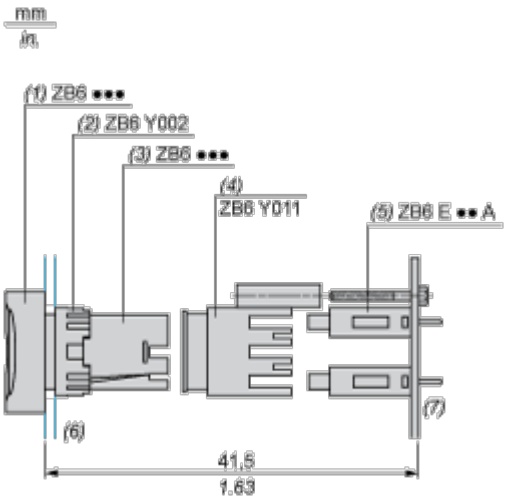

(1) Head

(2) Nut

(3) Body

(4) Body bracket

(5) Contact block

(6) Panel

(7) Printed circuit